STGW39NC60VD

N-CHANNEL 40A - 600V - TO-247
Very Fast PowerMESH™ IGBT

TARGET SPECIFICATION

Table 1: General Features

TYPE	V_{CES}	$V_{CE(sat)}$ (Max) @25°C	I_C @100°C
STGW39NC60VD	600V	< 2.5 V	40 A

- HIGH CURRENT CAPABILITY
- HIGH FREQUENCY OPERATION UP TO 50 KHz
- LOSSES INCLUDE DIODE RECOVERY ENERGY
- OFF LOSSES INCLUDE TAIL CURRENT
- LOWER C_{RES} / C_{IES} RATIO
- NEW GENERATION PRODUCTS WITH TIGHTER PARAMETER DISTRUBUTION

Figure 1: Package

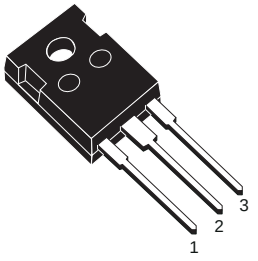

TO-247

DESCRIPTION

Using the latest high voltage technology based on a patented strip layout, STMicroelectronics has designed an advanced family of IGBTs, the PowerMESH™ IGBTs, with outstanding performances. The suffix “V” identifies a family optimized for high frequency.

Figure 2: Internal Schematic Diagram

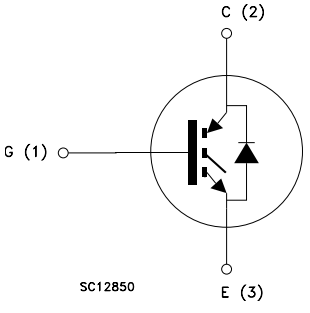

APPLICATIONS

- HIGH FREQUENCY INVERTERS
- SMPS and PFC IN BOTH HARD SWITCH AND RESONANT TOPOLOGIES
- UPS
- MOTOR DRIVERS

Table 2: Order Codes

SALES TYPE	MARKING	PACKAGE	PACKAGING
STGW39NC60VD	GW39NC60VD	TO-247	TUBE

Rev. 1

This is a preliminary information on a new product now in development. Details are subject to change without notice.

Table 3: Absolute Maximum ratings

Symbol	Parameter	Value	Unit
V_{CES}	Collector-Emitter Voltage (V_{GS} = 0)	600	V
V_{ECR}	Reverse Battery Protection	20	V
V_{GE}	Gate-Emitter Voltage	± 20	V
I_C	Collector Current (continuous) at 25°C (#)	70	A
I_C	Collector Current (continuous) at 100°C (#)	40	A
I_{CM} (1)	Collector Current (pulsed)	100	A
I_f	Diode RMS Forward Current at Tc = 25°C	40	A
P_{TOT}	Total Dissipation at T_C = 25°C	215	W
	Derating Factor	1.72	W/°C
T_{stg}	Storage Temperature	– 55 to 150	°C
T_j	Operating Junction Temperature		

(1)Pulse width limited by max. junction temperature.

Table 4: Thermal Data

		Min.	Typ.	Max.	Unit
Rthj-case	Thermal Resistance Junction-case			0.58	°C/W
Rthj-case	Thermal Resistance Junction-case (Diode)			1.5	°C/W
Rthj-amb	Thermal Resistance Junction-ambient			50	°C/W
T_L	Maximum Lead Temperature for Soldering Purpose (1.6 mm from case, for 10 sec.)		300		°C

ELECTRICAL CHARACTERISTICS (T_{CASE} =25°C UNLESS OTHERWISE SPECIFIED)

Table 5: Off

Symbol	Parameter	Test Conditions	Min.	Typ.	Max.	Unit
$V_{BR(CES)}$	Collectro-Emitter Breakdown Voltage	I_C = 1mA, V_{GE} = 0	600			V
I_{CES}	Collector-Emitter Leakage Current (V_{CE} = 0)	V_{GE} = Max Rating, Tc=25°C Tc=125°C			10 1	µA mA
I_{GES}	Gate-Emitter Leakage Current (V_{CE} = 0)	V_{GE} = ± 20V , V_{CE} = 0			± 100	nA

Table 6: On

Symbol	Parameter	Test Conditions	Min.	Typ.	Max.	Unit
$V_{GE(th)}$	Gate Threshold Voltage	V_{CE}= V_{GE}, I_C= 250µA	3.75		5.75	V
$V_{CE(SAT)}$	Collector-Emitter Saturation Voltage	V_{GE}= 15V, I_C= 30A, Tj= 25°C V_{GE}= 15V, I_C= 30A, Tj= 125°C		1.8 1.7	2.5	V V

(#) Calculated according to the iterative formula:

$$I_C(T_C) = \frac{T_{JMAX} - T_C}{R_{THJ-C} \times V_{CESAT(MAX)}(T_C, I_C)}$$

ELECTRICAL CHARACTERISTICS (CONTINUED)

Table 7: Dynamic

Symbol	Parameter	Test Conditions	Min.	Typ.	Max.	Unit
g_{fs}(1)	Forward Transconductance	V_{CE} = 15V, I_C= 30A		TBD		S
C_{ies} C_{oes} C_{res}	Input Capacitance Output Capacitance Reverse Transfer Capacitance	V_{CE} = 25V, f = 1MHz, V_{GE} = 0		TBD TBD TBD		pF pF pF
Q_g Q_{ge} Q_{gc}	Total Gate Charge Gate-Emitter Charge Gate-Collector Charge	V_{CE} = 390V, I_C = 30A, V_{GE} = 15V, (see Figure 5)		TBD TBD TBD		nC nC nC
I_{CL}	Turn-Off SOA Minimum Current	V_{clamp} = 480V , Tj = 150°C R_G = 100Ω, V_{GE}= 15V	200			A

Table 8: Switching On

Symbol	Parameter	Test Conditions	Min.	Typ.	Max.	Unit
$t_{d(on)}$ t_r $(di/dt)_{on}$ Eon (2)	Turn-on Delay Time Current Rise Time Turn-on Current Slope Turn-on Switching Losses	V_{CC} = 390V, I_C = 30A R_G= 3.3Ω, V_{GE}= 15V, Tj= 25°C (see Figure 3)		TBD TBD TBD TBD	 TBD	ns ns A/µs µJ
$t_{d(on)}$ t_r $(di/dt)_{on}$ Eon (2)	Turn-on Delay Time Current Rise Time Turn-on Current Slope Turn-on Switching Losses	V_{CC} = 390V, I_C = 30A R_G= 3.3Ω, V_{GE}= 15V,Tj= 125°C (see Figure 3)		TBD TBD TBD TBD		ns ns A/µs µJ

(2) Eon is the turn-on losses when a typical diode is used in the test circuit in figure 2. If the IGBT is offered in a package with a co-pack diode, the co-pack diode is used as external diode. IGBTs & DIODE are at the same temperature (25°C and 125°C)

Table 9: Switching Off

Symbol	Parameter	Test Conditions	Min.	Typ.	Max.	Unit
$t_r(V_{off})$	Off Voltage Rise Time	V_{cc} = 390V, I_C = 30A, R_{GE} = 3.3Ω , V_{GE} = 15V T_J = 25°C (see Figure 3)		TBD		ns
$t_{d(off)}$	Turn-off Delay Time			TBD		ns
t_f	Current Fall Time			TBD		ns
E_{off} (3)	Turn-off Switching Loss			TBD	TBD	µJ
E_{ts}	Total Switching Loss			TBD	TBD	µJ
$t_r(V_{off})$	Off Voltage Rise Time	V_{cc} = 390V, I_C = 30A, R_{GE} = 3.3Ω , V_{GE} = 15V Tj = 125°C (see Figure 3)		TBD		ns
$t_{d(off)}$	Turn-off Delay Time			TBD		ns
t_f	Current Fall Time			TBD		ns
E_{off} (3)	Turn-off Switching Loss			TBD		µJ
E_{ts}	Total Switching Loss			TBD		µJ

(3)Turn-off losses include also the tail of the collector current.

Table 10: Collector-Emitter Diode

Symbol	Parameter	Test Conditions	Min.	Typ.	Max.	Unit
V_f	Forward On-Voltage	I_f = 30A I_f = 30A, Tj = 125°C		1.4 1.1	2.1	V V
t_{rr} t_a Q_{rr} I_{rrm} S	Reverse Recovery Time Reverse Recovery Charge Reverse Recovery Current Softness factor of the diode	I_f = 30A ,V_R = 40V, Tj = 25°C, di/dt = 100A/µs (see Figure 6)		44 32 66 3 0.375		ns ns nC A
t_{rr} t_a Q_{rr} I_{rrm} S	Reverse Recovery Time Reverse Recovery Charge Reverse Recovery Current Softness factor of the diode	I_f = 30A ,V_R = 40V, Tj =125°C, di/dt = 100A/µs (see Figure 6)		88 56 237 5.4 0.57		ns ns nC A

Figure 3: Test Circuit for Inductive Load Switching

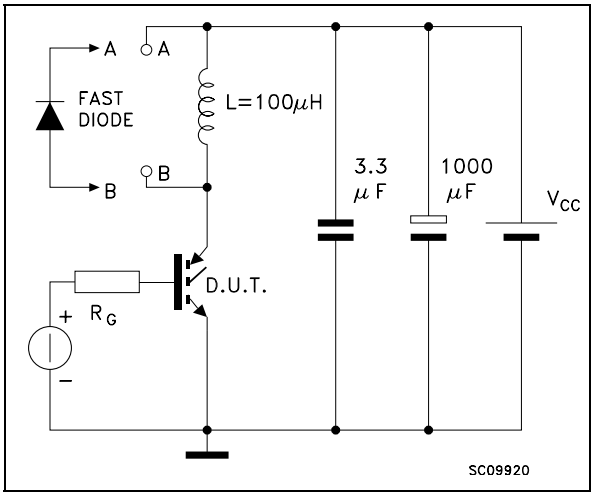

Figure 4: Switching Waveforms

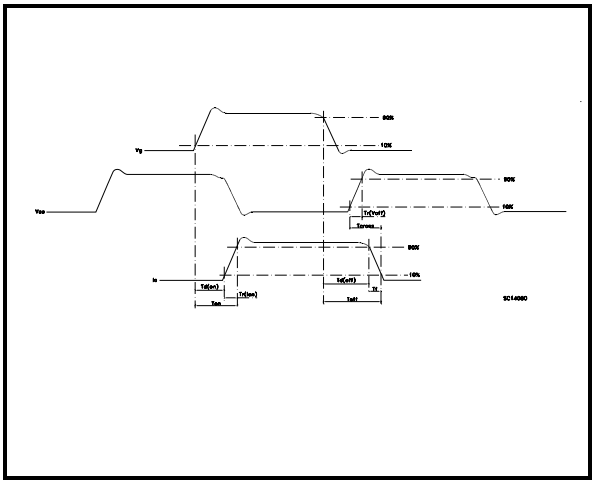

Figure 5: Gate Charge Test Circuit

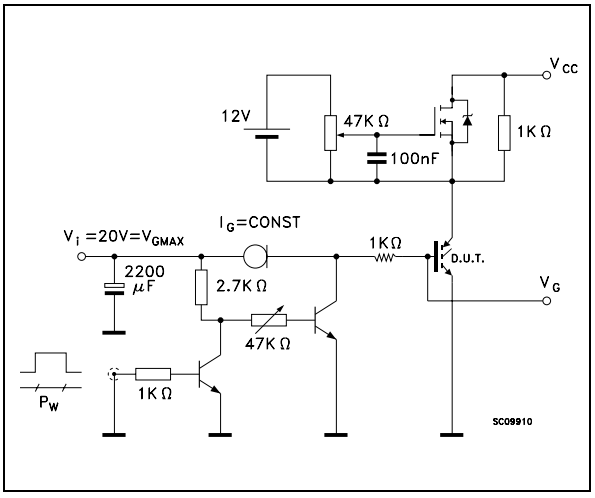

Figure 6: Diode Recovery Times Waveform

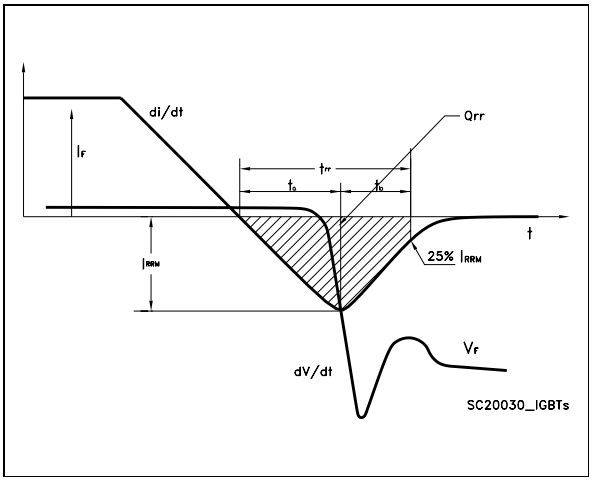

In order to meet environmental requirements, ST offers these devices in ECOPACK® packages. These packages have a Lead-free second level interconnect . The category of second level interconnect is marked on the package and on the inner box label, in compliance with JEDEC Standard JESD97. The maximum ratings related to soldering conditions are also marked on the inner box label. ECOPACK is an ST trademark. ECOPACK specifications are available at: www.st.com

TO-247 MECHANICAL DATA

DIM.	mm.			inch		
	MIN.	TYP	MAX.	MIN.	TYP.	MAX.
A	4.85		5.15	0.19		0.20
A1	2.20		2.60	0.086		0.102
b	1.0		1.40	0.039		0.055
b1	2.0		2.40	0.079		0.094
b2	3.0		3.40	0.118		0.134
c	0.40		0.80	0.015		0.03
D	19.85		20.15	0.781		0.793
E	15.45		15.75	0.608		0.620
e		5.45			0.214	
L	14.20		14.80	0.560		0.582
L1	3.70		4.30	0.14		0.17
L2		18.50			0.728	
øP	3.55		3.65	0.140		0.143
øR	4.50		5.50	0.177		0.216
S		5.50			0.216	

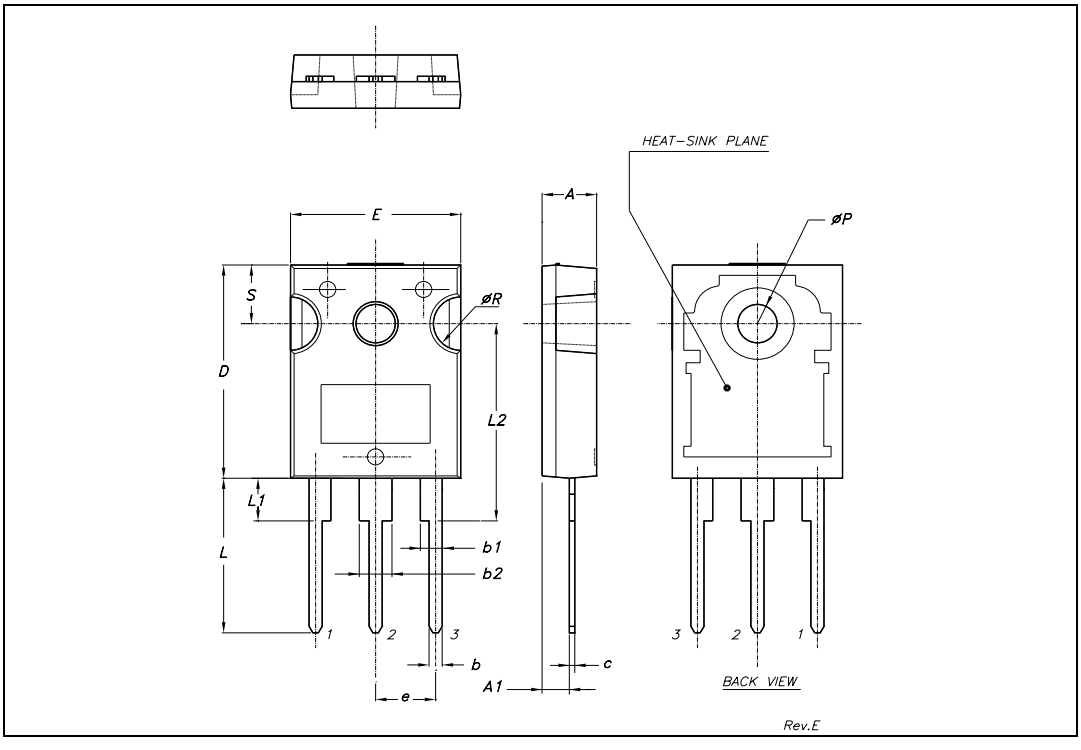

ISOWATT218 MECHANICAL DATA

DIM.	mm			inch		
	MIN.	TYP.	MAX.	MIN.	TYP.	MAX.
A	5.35		5.65	0.211		0.222
C	3.30		3.80	0.130		0.150
D	2.90		3.10	0.114		0.122
D1	1.88		2.08	0.074		0.082
E	0.75		0.95	0.030		0.037
F	1.05		1.25	0.041		0.049
F2	1.50		1.70	0.059		0.067
F3	1.90		2.10	0.075		0.083
G	10.80		11.20	0.425		0.441
H	15.80		16.20	0.622		0.638
L		9			0.354	
L1	20.80		21.20	0.819		0.835
L2	19.10		19.90	0.752		0.783
L3	22.80		23.60	0.898		0.929
L4	40.50		42.50	1.594		1.673
L5	4.85		5.25	0.191		0.207
L6	20.25		20.75	0.797		0.817
N	2.1		2.3	0.083		0.091
R		4.6			0.181	
DIA	3.5		3.7	0.138		0.146

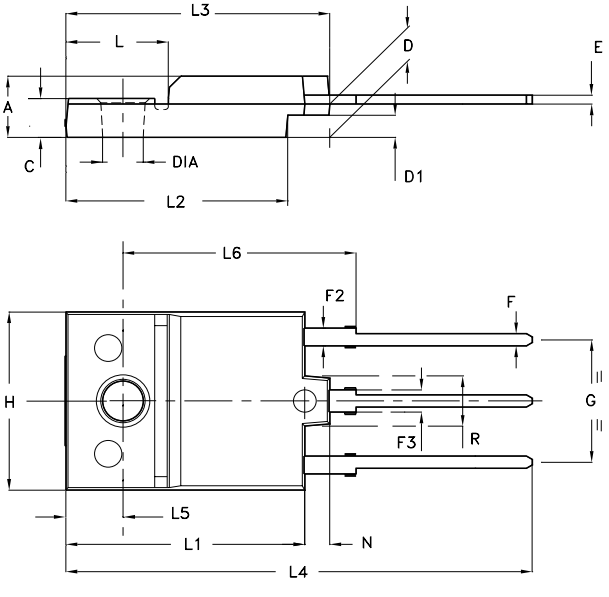

- Weight : 4.9 g (typ.)
- Maximum Torque (applied to mounting flange) Recommended: 0.8 Nm; Maximum: 1 Nm
- The side of the dissipator must be flat within 80 µm

P025C/A

Table 11: Revision History

Date	Revision	Description of Changes
17-Nov-2005	1	First Release

Information furnished is believed to be accurate and reliable. However, STMicroelectronics assumes no responsibility for the consequences of use of such information nor for any infringement of patents or other rights of third parties which may result from its use. No license is granted by implication or otherwise under any patent or patent rights of STMicroelectronics. Specifications mentioned in this publication are subject to change without notice. This publication supersedes and replaces all information previously supplied. STMicroelectronics products are not authorized for use as critical components in life support devices or systems without express written approval of STMicroelectronics.

The ST logo is a registered trademark of STMicroelectronics

All other names are the property of their respective owners

© 2005 STMicroelectronics - All Rights Reserved

STMicroelectronics group of companies

Australia - Belgium - Brazil - Canada - China - Czech Republic - Finland - France - Germany - Hong Kong - India - Israel - Italy - Japan - Malaysia - Malta - Morocco - Singapore - Spain - Sweden - Switzerland - United Kingdom - United States of America

www.st.com